JC35EN3A Lifting Column



JC35EN-3A Column – A high torque, high load, low noise lifting column.
Key advantages:
• Multiple model options, high load capacity (max. 6000N)
• Ultra low installation height
• Excellent static and dynamic bending moment performance
These features make the JC35EN-3A suitable for a wide range of demanding applications, including hospital beds, dental chairs, and therapy tables.

Compared to the JC35EN-2, the JC35EN-3A has a lower installation height and faster speed. When equipped with built in Hall sensors and paired with Jiecang smart controllers, it can synchronize with other columns in multi column systems.

Features And Options

Output Voltage:	24V
Dynamic Load Push(N):	2000N | 4000N | 6000N
Stroke Length:	100≤S≤400
Installation Dimension:	2000N: L = S/2 + 150 4000N: L = S/2 + 200 6000N: L=S/2+250
Stroke Length:	100≤S≤400
No-load Current:	≤2.5A
Rated Load Current:	2000N: ≤5A 4000N: ≤6A 6000N: ≤7A
No-load Speed:	2000N: 13mm/s±2 4000N: 10mm/s±2 6000N: 7mm/s±2
Rated Load Speed:	2000N: 12mm/s±2 4000N: 9mm/s±2 6000N: 6mm/s±2
Noise Level:	≤50dB (Ambient Noise ≤40dB)
Approval:	CE, UL

Usage

Duty Cycle:	10%, max. continuous work for 2min. and 18 min. off
Operating Temperature:	+5°C to +40°C
Operating Temperature:	-10°C to +50°C
Supporting Control Box:	Matching with JIECANG control box
Relative Humidity:	20% to 90% at 30°C, non-condensing
Atmospheric Pressure:	700 to 1060hPa

Dimensions

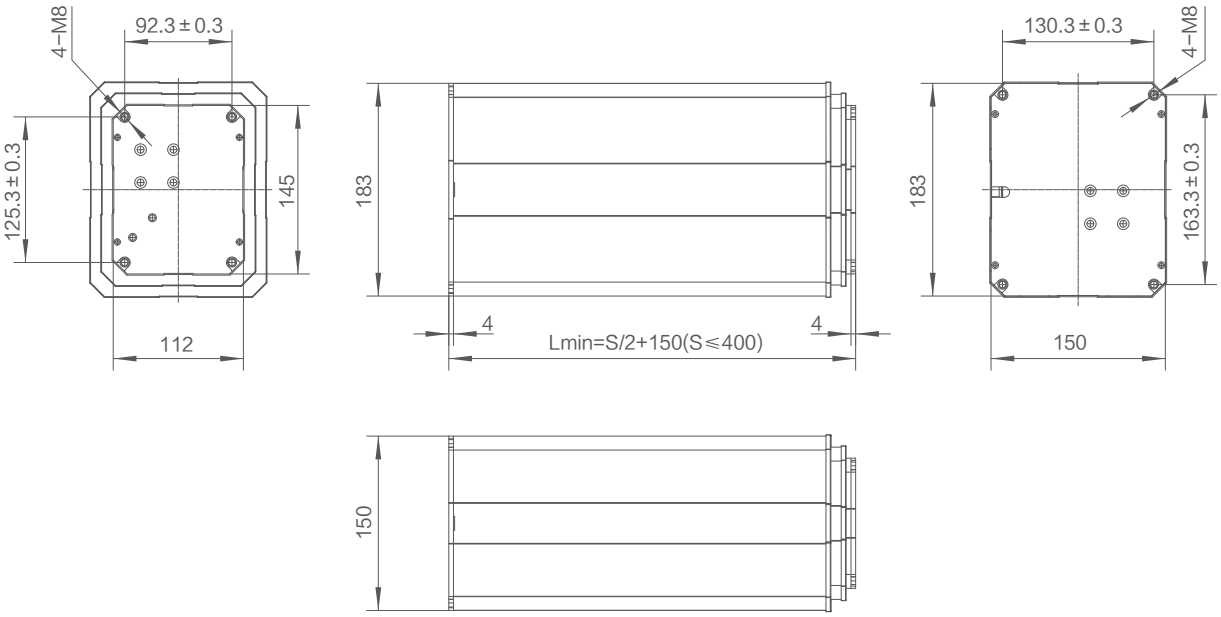

Installation dimensions

Load(N)	Stroke Length(mm)	Installation dimension(mm)
2000	100-400	L=S/2+150
4000	100-400	L=S/2+200
6000	100-400	L=S/2+250

Technical Specifications (Standard Value)

Input voltage (VDC)	Spindle pitch (mm)	Max. load in push (N)	Max. load in pull (N)	Mechanical self-lock (N)	Speed at no load/full load (mm/s)	Current at full load (A)
24	10+10	2000	/	≥2000	13/12	≤5
24	7.5+7.5	4000	/	≥4000	10/9	≤6
24	5+5	6000	/	≥6000	7/6	≤7

Remarks: It can achieve better self-locking ability with Jiecang control box;
The above data is the standard value of the test data (inspection specification) at room temperature of 25°C.
1kg=2.2lb, 100mm=3.94inch

Diagram of relationship between stroke length and load

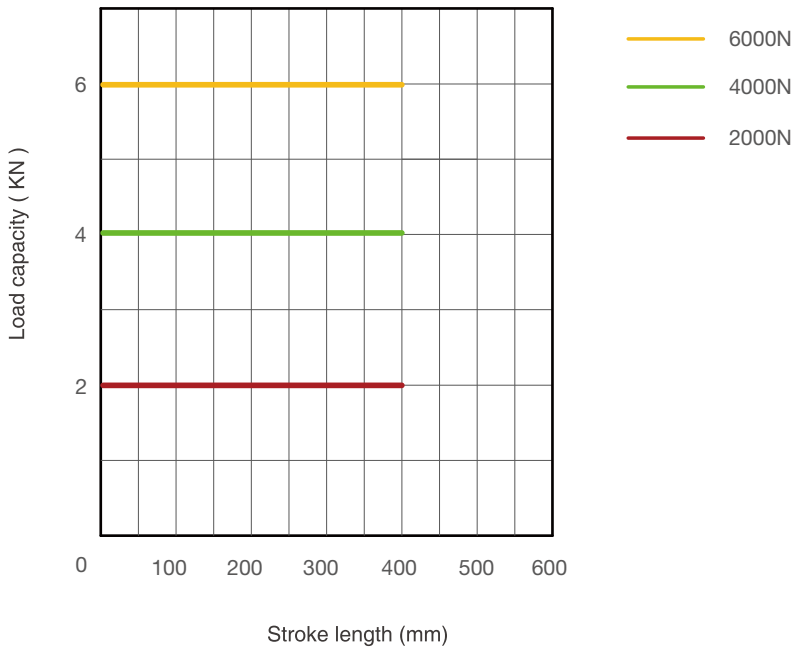

Characteristic Curve

Typical speed
Min. speed
Typical current
Max. current

2000N

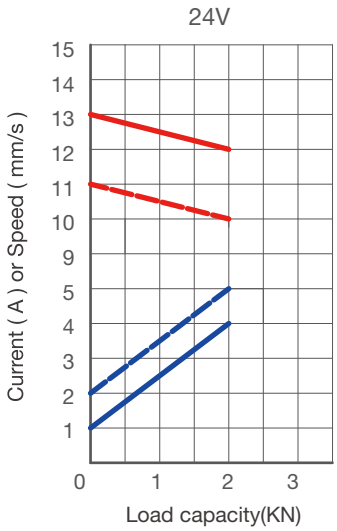

4000N

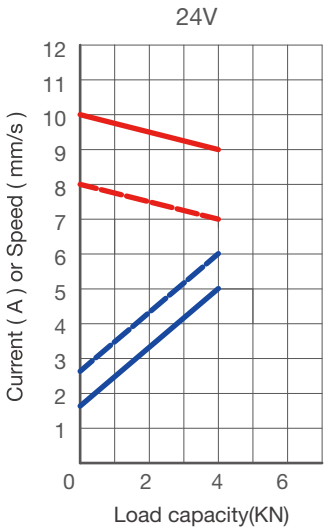

6000N

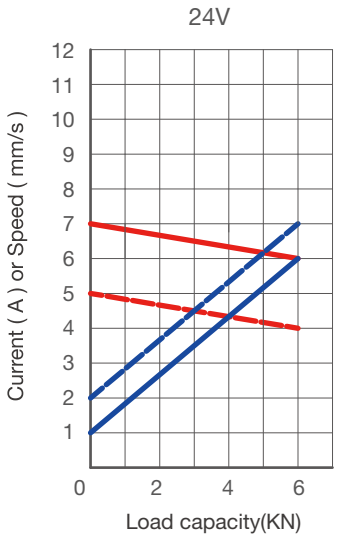

Ordering Example

Take **JC35EN3AY021224400/35001102D0070** for example

Model	**JC35EN3A**	
Optional features	**X**	0 = Standard / Y=Hall sensor
Profile code	**X**	0 = Standard
Load in push	**X**	2=2000N
Speed at full load	**X**	12=12mm/s
Input voltage	**XX**	24=24VDC
Stroke length/ Installation dimensions	**XXX/XXX**	Stroke length=XXX Installation dimensions =XXX
Mounting plate code	**X**	0 = Standard
Cable outlet	**X**	1=Top cable outlet
Type of connector and cable	**XX**	07=4 Pin Din connector
Cable length	**XXX**	2D0=2m
Surface treatment	**XX**	07=anodized treatment
Colour	**X**	0=None

Ordering Details

Motor cable

4 Pin Din connector (standard)

Supporting control boxes:
JCB35Q / JCB35T / JCB35R / JCB35R1 / JCB35S

Pin	Color	Functions
1	NC	Not connected
2	Brown	power with positive voltage, actuator going up
3	Blue	power with positive voltage, actuator going down
4	NC	Not connected
Outer Circle	NC	Not connected



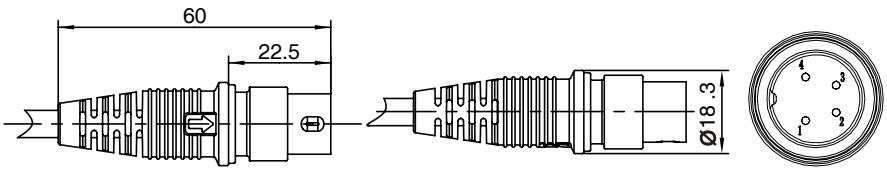

Strictly abiding by medical safety certifications

Passed EMC tests. To ensure our products pass all kinds of tests domestic or abroad.

Communication protocol development

Aiming at different applications, develop more extensive functions for control system.

Professional customization

Powerful R&D strength, fully satisfy customers' needs. Development cycle is about 10 days, seizing more market opportunities

Intelligent Control of Bluetooth

Mobile phone as the remote, applying in home care. Market pioneer, Jiecang provides better choices

Wireless Communication

Controllers adopt high-frequency wireless system. It can avoid interference mixing with signal receivers, assisting in remote control over medical equipment.

Latest Weighing System

Designed for physiotherapy beds and medical care beds. Cantilever carrying weighing sensor, it is applicable to different bedsteads dispensing with any adjustment

Disclaimer and Exclusion of Liability

The user must determine the suitability of JIECANG products under specific conditions. JIECANG is committed to providing the latest product information. However, as JIECANG's product are constantly improving, it is possible to make changes to JIECANG's product without prior notice. Therefore, JIECANG cannot guarantee the correctness and authenticity of the product information. Although JIECANG will do its best to meet the order requirements, due to the above reasons, JIECANG cannot guarantee the delivery capacity of any specific product.

Therefore, JIECANG reserves the right to stop selling any products listed on the website or product catalog or other JIECANG written materials. All sales activities must be carried out in accordance with the requirements of JIECANG sales and Delivery Standard Clauses. For copies of relevant documents, please contact JIECANG.

Notes for mounting and usage can be found in the corresponding mounting manual

TECHNOLOGY
DRIVES INTELLIGENT LIFE