JC35L18/JC35L18F Linear Actuator

1. JC35L18 is a kind of actuator with low noise and high load capacity. It has following specifications: JC35L18-8000N (push); JC35L18-6000N (push); JC35L18F-4000N（push）; JC35L18F-3000N（push）. JC35L18 is characterized by large load capacity, short installation dimensions, IP grade up to IPX6W and low noise;

2. It is widely used in medical bed, operating bed, nursing bed and other fields.



Features And Options

Dynamic Load Push(N):	8000N | 6000N | 4000N | 3000N
Dynamic Load Pull (N):	/
Colour:	Gray
Protection Class:	Max. IPX6W
Stroke Length:	Standard: 8000N: 50-500mm / 6000N: 50-500mm Fast version: 4000N: 50-800mm / 3000N: 50-300mm
Installation Dimension:	Standard: L=S+175(50≤S≤400) / L=S+195(400＜S≤500) Fast version: L=S+175(50＜S≤200) / L=S+185(200＜S≤800)
Noise Level:	≤48dB, (4000N, Spindle pitch=7.5mm version ≤52dB) (environmental noise≤40dB)
Standard:	Manual operation
Optional:	Safety nut, Hall sensor, Signal switch
Limit Switch:	Built-in (electronic)
Weight:	About 3kg (different stroke length and installation dimensions with different weight)
Static Bending Noment:	Lateral load is not allowed
Approval:	IEC60601-1：2012 EN 60601-1:2006+A12:2014 ANSI/AAMI ES60601-1:2005/(R)2012 and A1:2012, C1:2009/(R)2012 and A2:2010/(R)2012

Usage

Duty Cycle:	10%, max. continuous work for 2min. and 18 min. off
Operating Temperature:	+5°C to +40°C
Reserve Temperature:	-10°C to +50°C
Supporting Control Box:	Matching with JIECANG control box
Relative Humidity:	Under 30°C, 20% to 90%, non-condensing
Atmospheric Pressure:	700 to1060hPa

Dimensions

Front clevis F14, end clevis B04

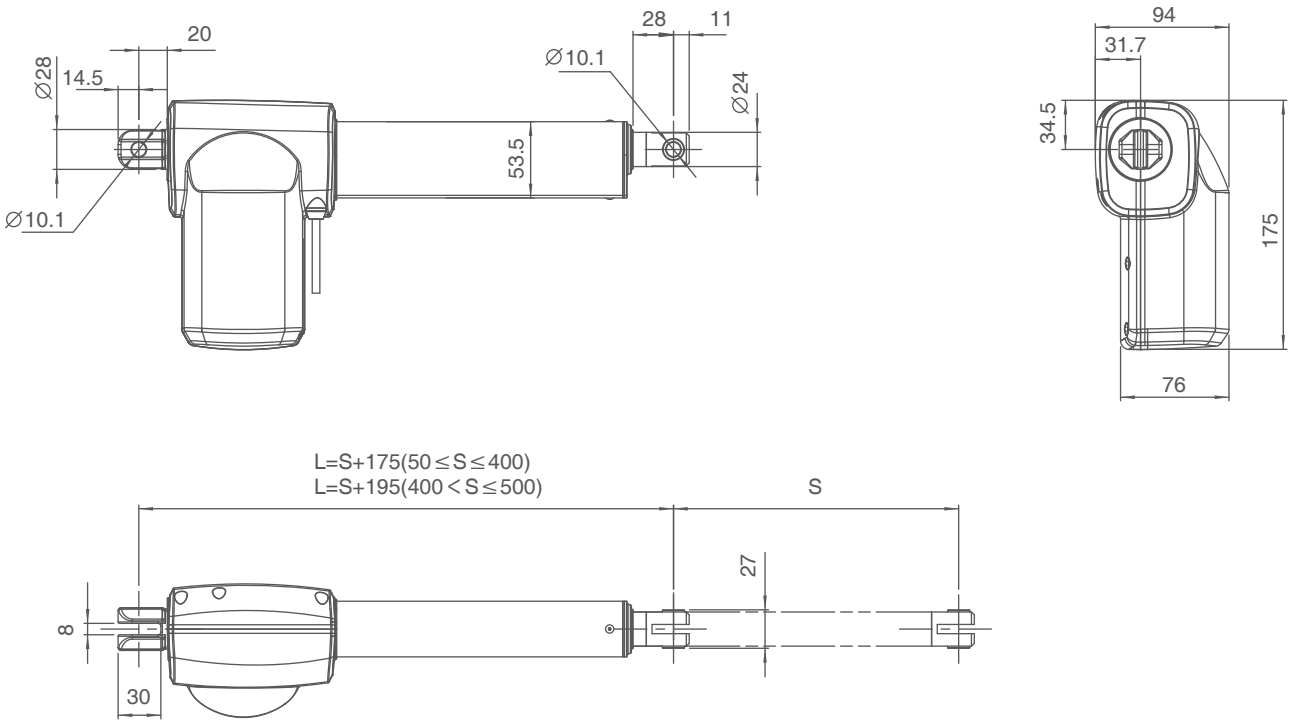

Front clevis F08, end clevis B04

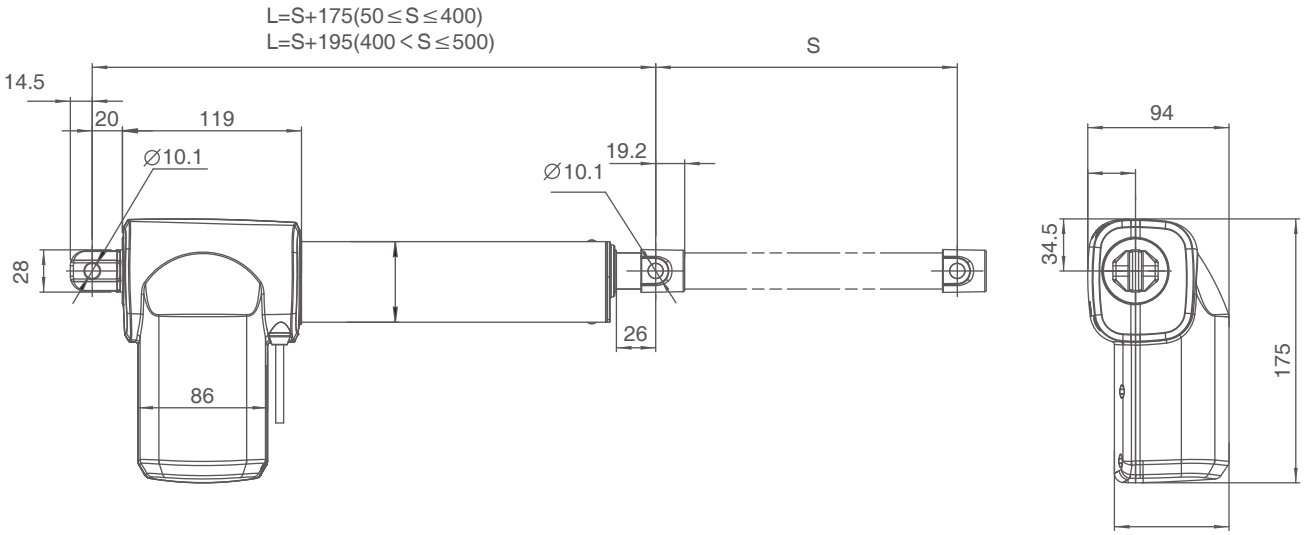

Dimensions(Fast version)

Front clevis F14, end clevis B04

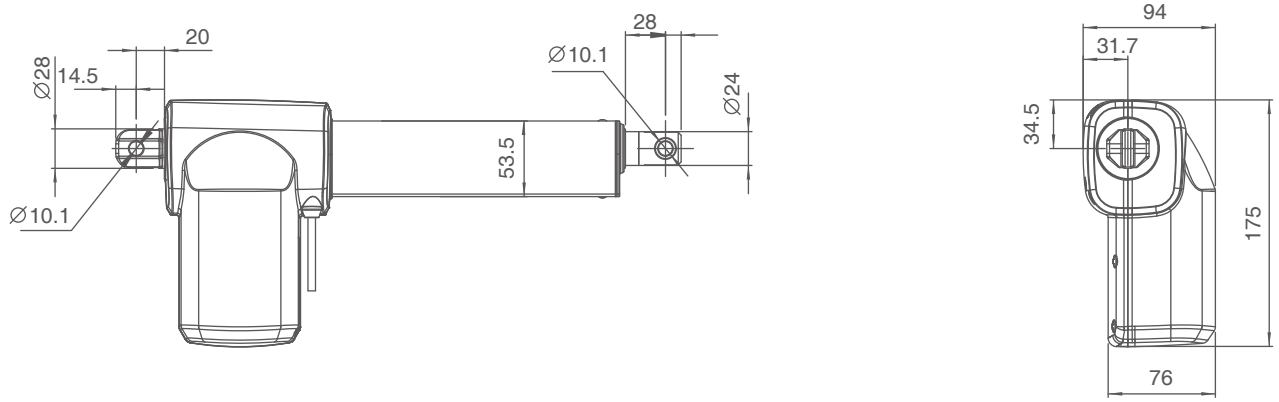

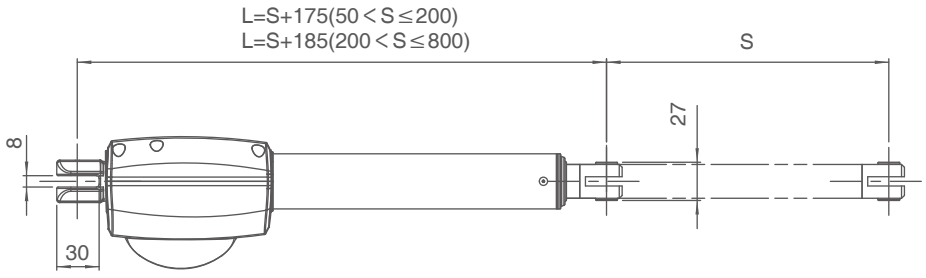

Front clevis F08, end clevis B04

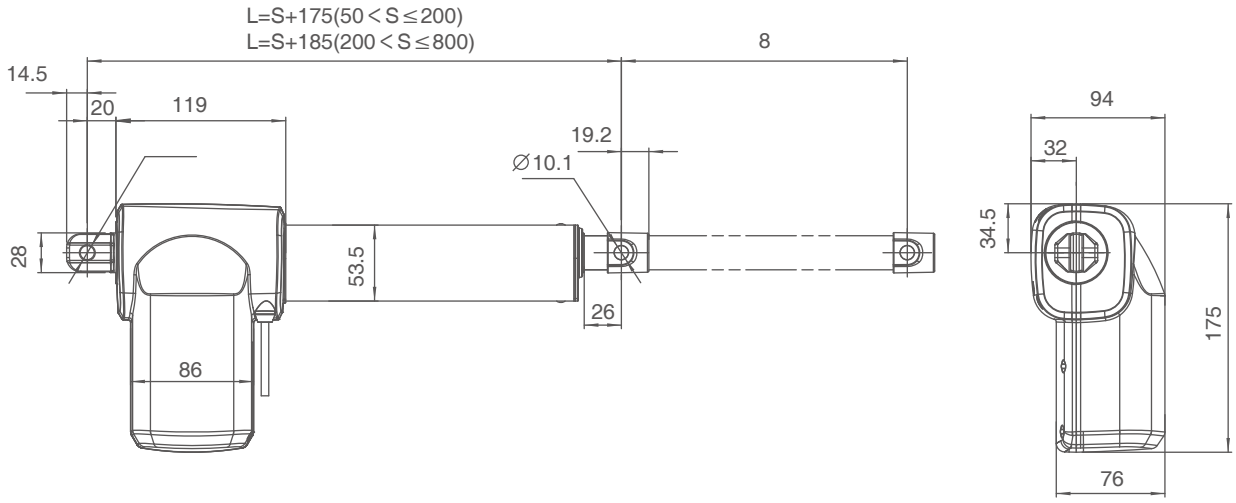

Technical Specifications (Standard Value)

Input voltage (VDC)	Spindle pitch (mm)	Max. load in push (N)	Max. load in pull (N)	Mechanical Self-locking (N)	Speed at no load/full load (mm/s)	Current at full load (A)
24	3	8000	/	8000	4.4/3	≤6
	4	6000	/	6000	6/5	≤5
	7.5	4000	/	4000	21/14	≤9
	12	3000	/	3000	21/15	≤6
29	3	8000	/	8000	5.3/3.6	≤6
	4	6000	/	6000	7.2/6	≤5
	7.5	4000	/	4000	27/16.8	≤9
	12	3000	/	3000	25/18	≤6
36	3	8000	/	8000	6/4.5	≤6
	4	6000	/	6000	9/7.5	≤5

Remarks: It can achieve better self-locking ability with Jiecang control box;
The above data is the standard value of the test data (inspection specification) at room temperature of 25°C.

Ordering Key

Take **JC35L1808324200/375HG04L142022D0** as an example

Model	**JC35L18**	
Optional features	**X**	0=Standard | F=Fast version S=Safety nut | Y=Hall sensor SY=Safety nut + Hall sensor FS=Fast version+Safety nut | FY=Fast version + Hall sensor FSY=Fast version+safety nut+Hall sensor B= signal switch+mechanical end stop
Load in push	**X**	8=8000N | 6=6000N
Speed at full load	**X**	3=3mm/s | 5D5=5.5mm/s
Input voltage	**XX**	24=24VDC
Stroke length/ Installation dimension	**XXX/XXX**	Stroke length=XXX Installation dimensions =XXX
Clevis directions	**X**	H=horizontal V=vertical (to motor direction)
Colour	**X**	G=Gray
End clevis specification	**XX**	B04=slot 8, slot depth 30, and the hole diameter isϕ10.1, JC35L18 end clevis
End clevis material	**X**	L=Aluminium alloy
Front clevis specification	**XX**	F14: slot 6.5, depth 26, hole diameter ϕ 12.5 and ϕ 10.1 with plastic bushing F08: Without slot, ϕ10.1 with plastic bushing (gray)
Brake specification	**X**	0=Standard 2= Brake in push
Type of connector and cable	**XX**	02 = 4 Pin Din connector 10 = 5 Pin Din connector 93 = 6 Pin Mini-Fit elbow connector
Cable length	**XXX**	2D0=2m 0D5=0.5m

Diagram of relationship between stroke length and load

Standard

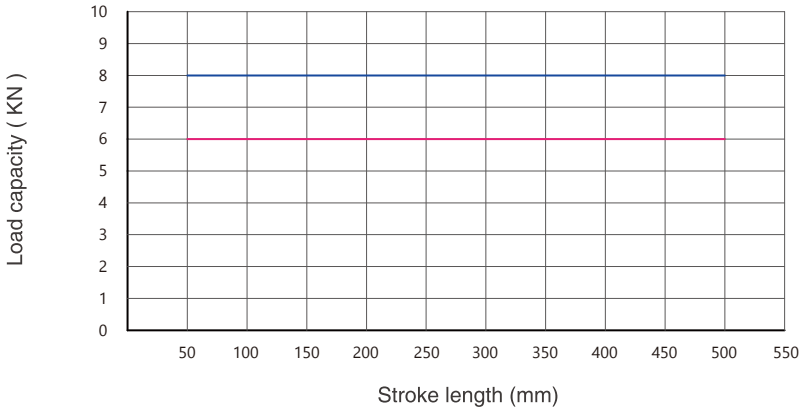

Fast version

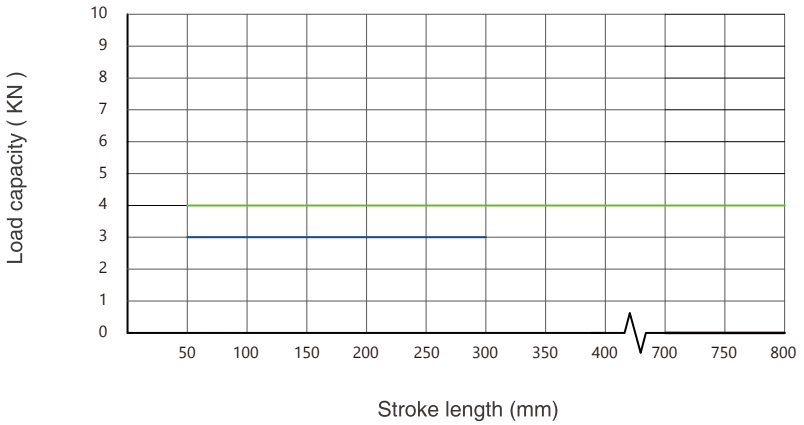

Characteristic Curve

Standard

Typical speed
Min. speed
Typical current
Max. current

8000N

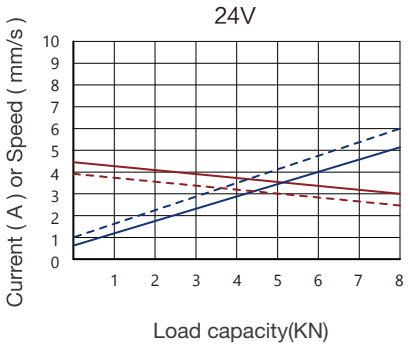

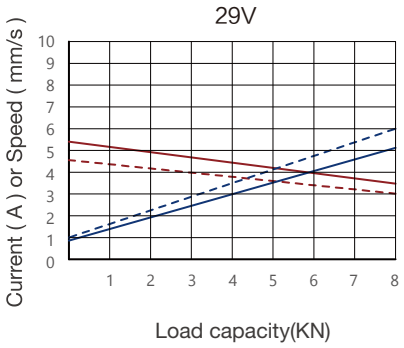

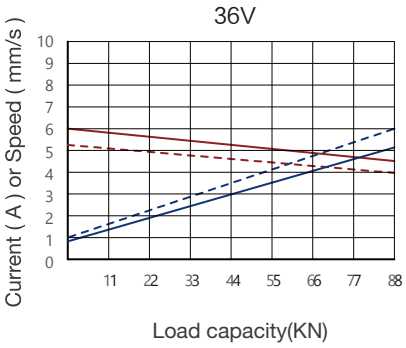

6000N

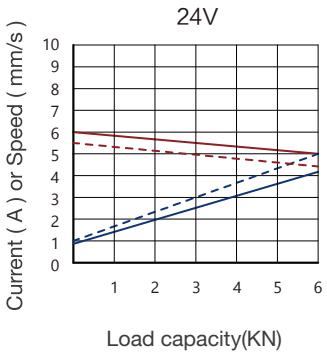

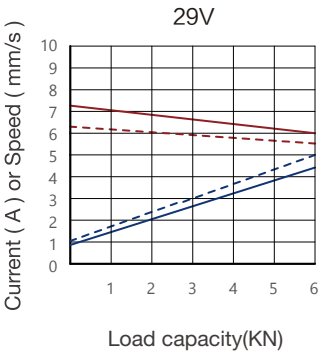

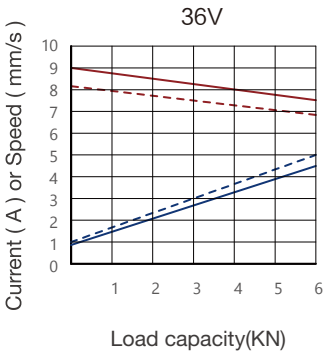

Characteristic Curve

Fast version

Typical speed
Min. speed
Typical current
Max. current

4000N

24V

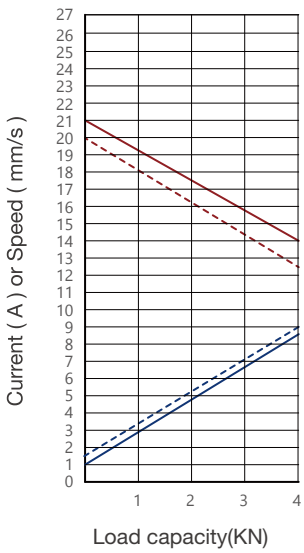

29V

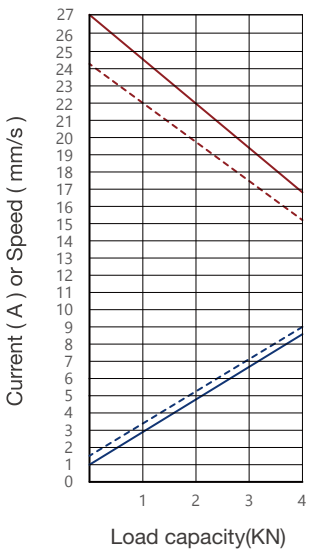

3000N

24V

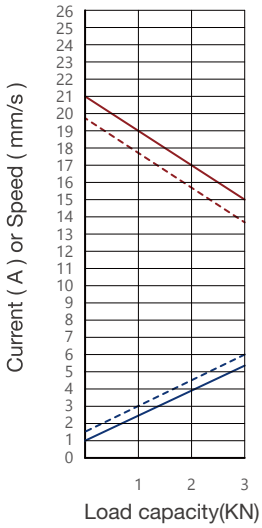

29V

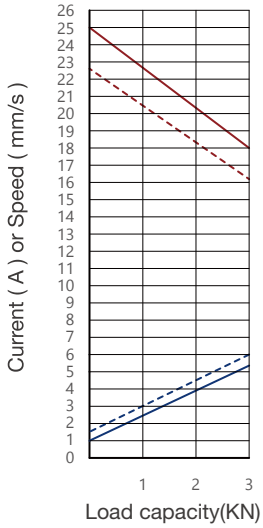

Ordering Details

Dimensions of clevis

End clevis B04

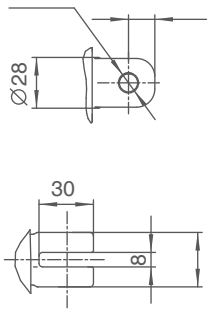

Front clevis F08

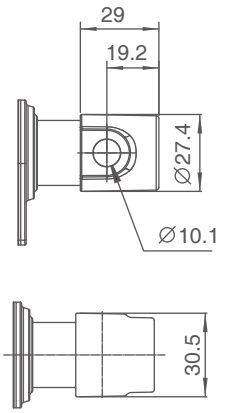

Front clevis F14

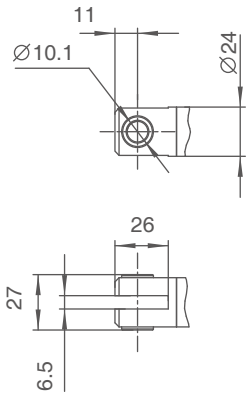

Motor cable

4 Pin Din Connector (standard)

Supporting control box : JCB35Q / JCB35T / JCB35R / JCB35R1 / JCB35S

Pin	Color	Functions
1	NC	Not connected
2	Brown	power with positive voltage, actuator going down
3	Blue	power with positive voltage, actuator going up
4	NC	Not connected
Outer Circle	NC	Not connected



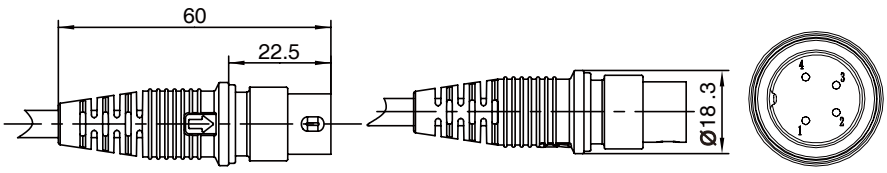

5 Pin Din Connector (with Hall sensor)

Supporting control box :
JCB35Q / JCB35T / JCB35R / JCB35R1 / JCB35S

Pin	Color	Functions
1	Red	5V
2	Brown	power with positive voltage, actuator going down
3	Black	GND
4	Blue	power with positive voltage, actuator going up
5	Yellow	Hall sensor signal 1
Outer Circle	Orange	Hall sensor signal 2



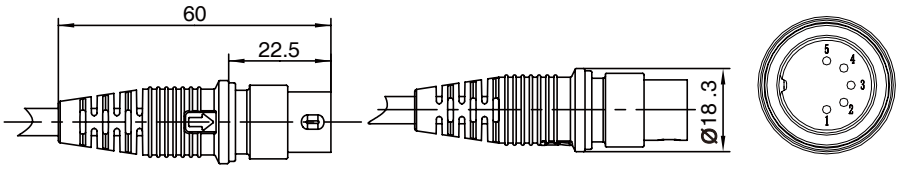

6 Pin Mini-Fit elbow connector

Supporting control box:
JCB35T2 / JCB35T3 / JCB35Q3 / JCB35K3

Pin	Color	Function
1	Red	When not in the lower limit, it is connected with orange
2	Brown	power with positive voltage, actuator going down
3	Black	When not in the upper limit, it is connected with yellow
4	Blue	power with positive voltage, actuator going up
5	Yellow	When not in the upper limit, it is connected with black
Outer Circle	Orange	When not in the lower limit, it is connected with red



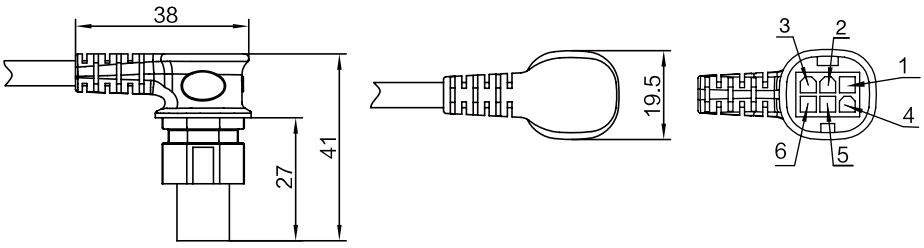

Strictly abiding by medical safety certifications

Passed EMC tests. To ensure our products pass all kinds of tests domestic or abroad.

Communication protocol development

Aiming at different applications, develop more extensive functions for control system.

Professional customization

Powerful R&D strength, fully satisfy customers' needs. Development cycle is about 10 days, seizing more market opportunities

Intelligent Control of Bluetooth

Mobile phone as the remote, applying in home care. Market pioneer, Jiecang provides better choices

Wireless Communication

Controllers adopt high-frequency wireless system. It can avoid interference mixing with signal receivers, assisting in remote control over medical equipment.

Latest Weighing System

Designed for physiotherapy beds and medical care beds. Cantilever carrying weighing sensor, it is applicable to different bedsteads dispensing with any adjustment

Disclaimer and Exclusion of Liability

The user must determine the suitability of JIECANG products under specific conditions. JIECANG is committed to providing the latest product information. However, as JIECANG's product are constantly improving, it is possible to make changes to JIECANG's product without prior notice. Therefore, JIECANG cannot guarantee the correctness and authenticity of the product information. Although JIECANG will do its best to meet the order requirements, due to the above reasons, JIECANG cannot guarantee the delivery capacity of any specific product.

Therefore, JIECANG reserves the right to stop selling any products listed on the website or product catalog or other JIECANG written materials. All sales activities must be carried out in accordance with the requirements of JIECANG sales and Delivery Standard Clauses. For copies of relevant documents, please contact JIECANG.

Notes for mounting and usage can be found in the corresponding mounting manual