JC35L82 Linear Actuator



The JC35L82 is a compact, high-load linear actuator.

It is primarily designed for electric sofas. Currently, the development of such bed and sofa systems is a major trend. Compact actuator designs better support the development of various bed and sofa configurations, and are more aligned with the market demand for home electric beds and sofas.

Features And Options

Load in Push:	1200N | 1500N | 2000N
Load in Pull:	1000N | 1500N
Colour:	Black
Protection Class:	IP20
Stroke Length:	2000N: 25-300mm 1200N/1500N: 25-500mm
Installation dimensions:	1200N/1500N: L=S+145 (25<S≤500) front limit required for stroke ≥200mm (vertical lift only) 2000N: L=S+145 (25<S≤300)
Optional	Hall sensor
Limit Switch	Built-in electrical
Weight:	About 2kg (different stroke length and installation dimensions with different weight)
Static Bending Moment:	Lateral load are not allowed
Noise Level:	≤45dB (no-load), ≤50dB (loaded) — ambient noise ≤40dB

Usage

Duty Cycle:	10%, max. continuous work for 2min. and 18 min. off
Operating Temperature:	+5°C to +40°C
Reserve Temperature:	-10°C to +50°C
Supporting Control Box:	Matching with JIECANG control box
Relative Humidity:	20% to 90% at 30°C, non-condensing
Atmospheric Pressure:	700 to1060hPa

Dimensions

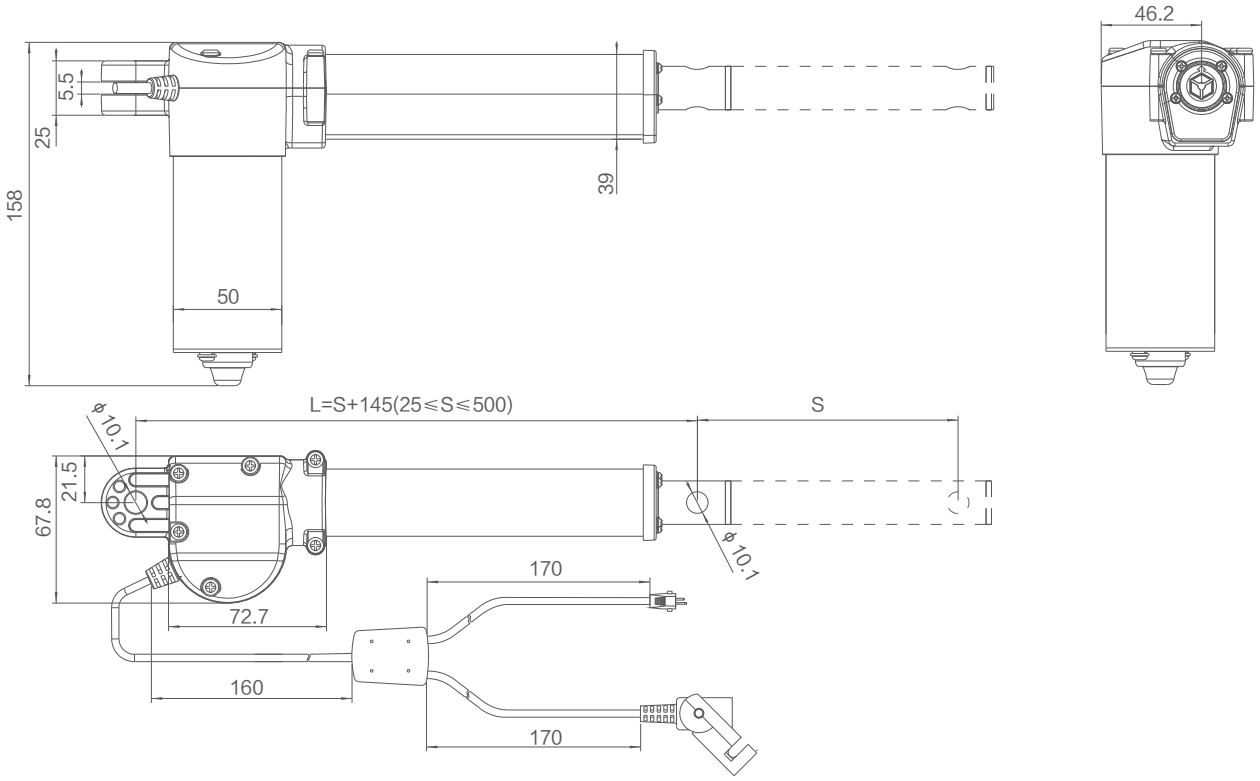

Technical Specifications (Standard Value)

Input voltage (VDC)	Spindle pitch (mm)	Max. load in push (N)	Max. load in pull (N)	Mechanical self-locking (N)	Speed at no load/full load (mm/s)	Current at full load (A)
29	7.5	2000	1500	1500	15/10	≤5.5
	5	1500	1000	1000	24/17	≤5.0
	5	1200	1000	1000	24/18	≤4.5

Remarks: It can achieve better self-locking ability with Jiecang control box;
The above data is the standard value of the test data (inspection specification) at room temperature of 25°C.
1kg=2.2lb, 100mm=3.94inch

Diagram of relationship between stroke length and load

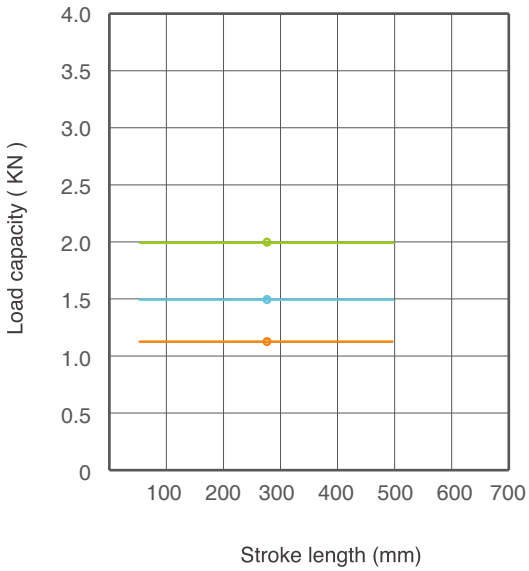

Characteristic Curve

Typical speed
Min. speed
Typical current
Max. current

1200N

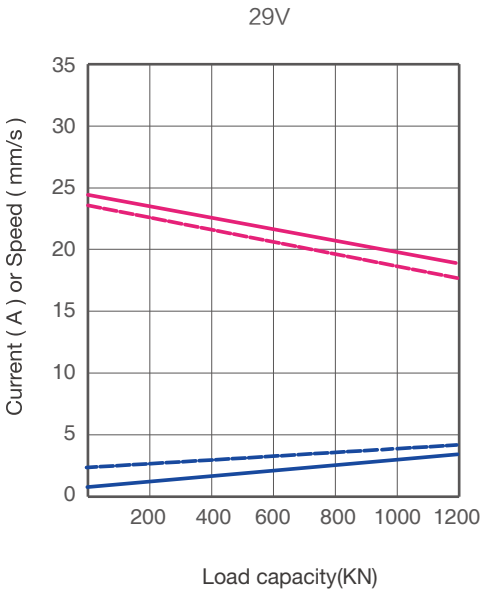

1500N

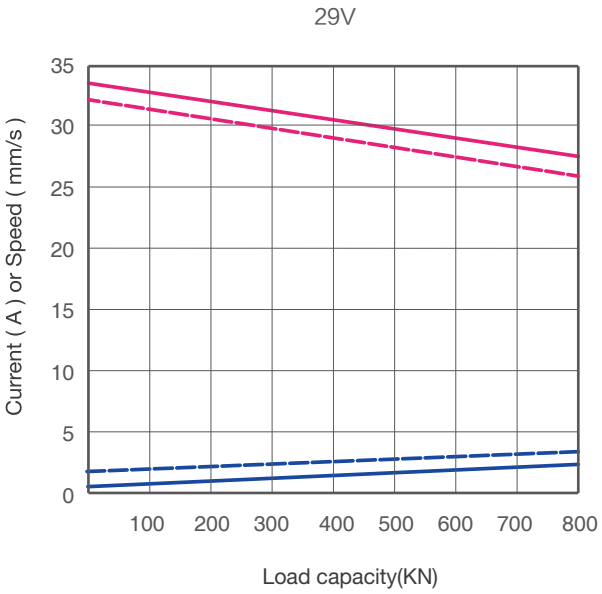

Characteristic Curve

Typical speed
Min. speed
Typical current
Max. current

2000N

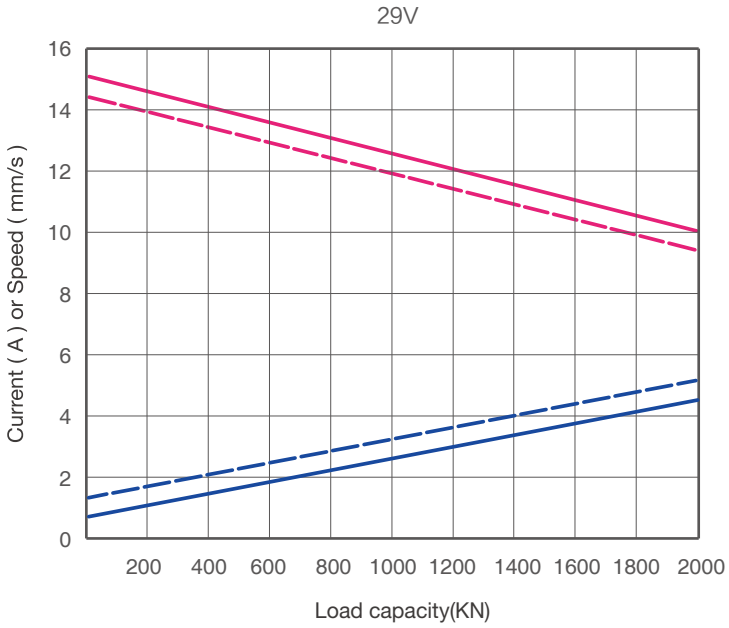

Ordering Key

Take **JC35L82Y1D51724370/540HBB82SF12302020D3** as an example

Model	**JC35L82**	
Optional features	**X**	0=Standard Y= Hall sensor
Load in push	**X**	2D0=2000N | 1D5=1500N | 1D2=1200N
Speed at full load	**X**	10=10mm/s | 17=17mm/s | 18=18mm/s | 15D5=15.5mm/s
Input voltage	**XX**	24=24VDC | 29=29VDC
Stroke length/ Installation dimension	**XXX/XXX**	Stroke length = XXX Installation dimension = XXX
Clevis directions	**X**	H = horizontal
Colour	**X**	B = Black
End clevis specification	**XX**	B82=slot 5.5, slot depth 25, and the hole diameter isϕ10.1
End clevis material	**X**	S=Plastic end clevis
Front clevis specification	**XX**	F123=Plastic tube plug for JC35L82, hole Ø10.1mm
Brake specification	**X**	0 = Standard
Type of connector and cable	**XX**	202=5-core male-female adapter cable, with (20AWG×4C)(20AWG×2C)(20AWG×2C) 1-to-2 L82 clip, lengths 0.17/0.17/0.16m, lug post 01 plug
Cable length	**XXX**	1D0=1m | 0D3=0.3m

Ordering Details

Dimensions of clevis

Front clevis F123

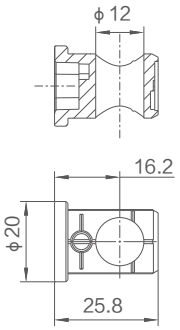

End clevis B82

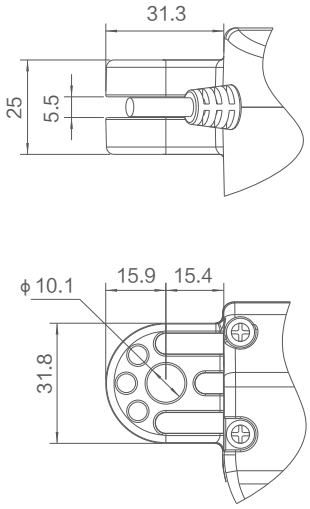

Motor cable

4 Pin Din connector (standard)

Supporting control box:
JCB35Q / JCB35T / JCB35R / JCB35R1 / JCB35S / JCB35K2

Pin	Colour	Function
1	NC	Not connected
2	Brown	When positive voltage power on,actuator will go down
3	Blue	When positive voltage power on,actuator will go up
4	NC	Not connected
Outer ring	NC	Not connected



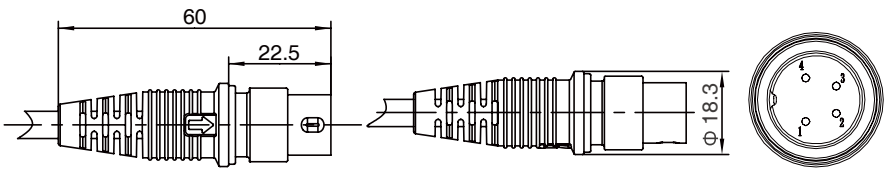

Cable clip 01
C01MC

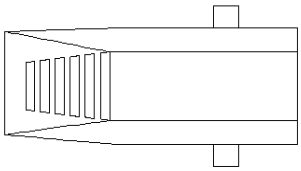
CTXK-0205

Male Plug with Cable Clip 01 (Male Plug with Ear Stud 01)
C01GC

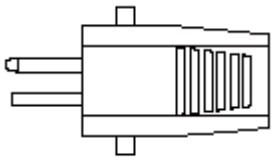
CTXK-0192

Strictly abiding by medical safety certifications

Passed EMC tests. To ensure our products pass all kinds of tests domestic or abroad.

Communication protocol development

Aiming at different applications, develop more extensive functions for control system.

Professional customization

Powerful R&D strength, fully satisfy customers' needs. Development cycle is about 10 days, seizing more market opportunities

Intelligent Control of Bluetooth

Mobile phone as the remote, applying in home care. Market pioneer, Jiecang provides better choices

Wireless Communication

Controllers adopt high-frequency wireless system. It can avoid interference mixing with signal receivers, assisting in remote control over medical equipment.

Latest Weighing System

Designed for physiotherapy beds and medical care beds. Cantilever carrying weighing sensor, it is applicable to different bedsteads dispensing with any adjustment

Disclaimer and Exclusion of Liability

The user must determine the suitability of JIECANG products under specific conditions. JIECANG is committed to providing the latest product information. However, as JIECANG's product are constantly improving, it is possible to make changes to JIECANG's product without prior notice. Therefore, JIECANG cannot guarantee the correctness and authenticity of the product information. Although JIECANG will do its best to meet the order requirements, due to the above reasons, JIECANG cannot guarantee the delivery capacity of any specific product.

Therefore, JIECANG reserves the right to stop selling any products listed on the website or product catalog or other JIECANG written materials. All sales activities must be carried out in accordance with the requirements of JIECANG sales and Delivery Standard Clauses. For copies of relevant documents, please contact JIECANG.

Notes for mounting and usage can be found in the corresponding mounting manual