JCB35K2-A Control box

JCB35K2-A is a specially developed solution for patient lift.
It provides care-takers with convenience for short distance transportation of patients.
With LED display, it can real-time show the battery status.
The complete system consists of a control box and a lithium battery enclosed in a single elegant module.



General Features

Output Voltage:	25.9VDC/2.2Ah or 4.4Ah
Actuator Ports:	Max 2 channels
Hand Control Port:	1 channel
Colour:	Gray
Over-current Protection:	Yes, with LED indication
Battery Status Display:	Simultaneously displayed on the handset and on the control box
Emergency Stop:	Yes
Low Voltage Alarm:	Buzzer alarm and indicator flashing
Protection Class:	IPX4

The battery status is shown in real-time with LED.
The control box can be charged directly.

Special Function

- Three-segment LED display of the battery status on handset. Double prompt to low battery: indicator flashing + buzzer alarm
- Low voltage alarm: Press the button, if it is detected that the battery voltage is lower than 21.5V, the buzzer will alarm. Release the button, the buzzer stops.
- No need to remove the battery, the control box can be charged by charger directly.
- Low power consumption: When without operation in 10S, the power indicator on the handset and the display on the control box will be off and the control box gets into the low power consumption state.

Usage

Operating Temperature:	+5 °C to +40°C
Storage Temperature:	-10°C to +50°C
Relative Humidity:	20% to 80%, non-condensing
Atmospheric Pressure:	700 to 1060 hPa
Altitude:	Max. 3000m

Dimensions

Control box

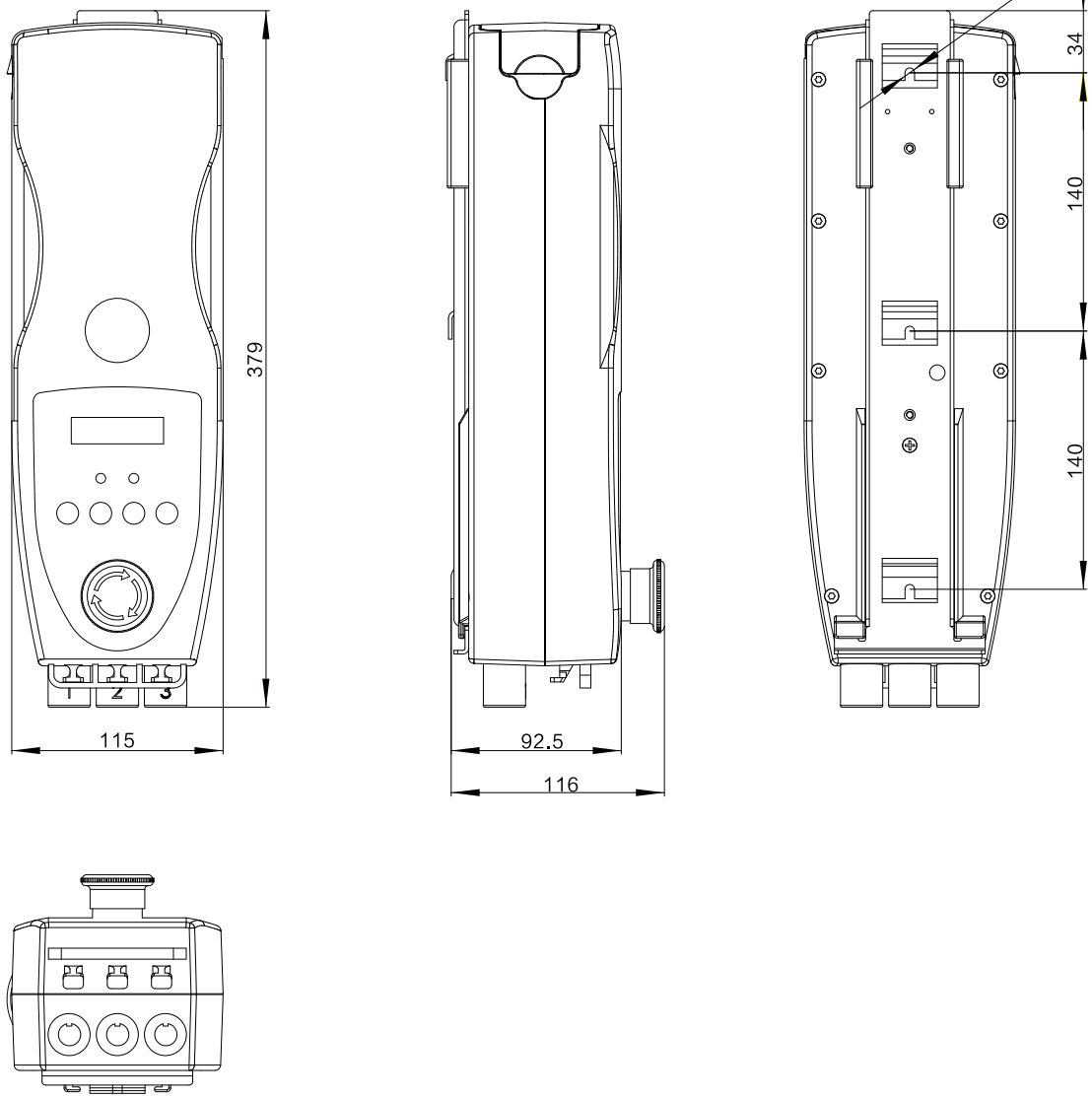

External Charger

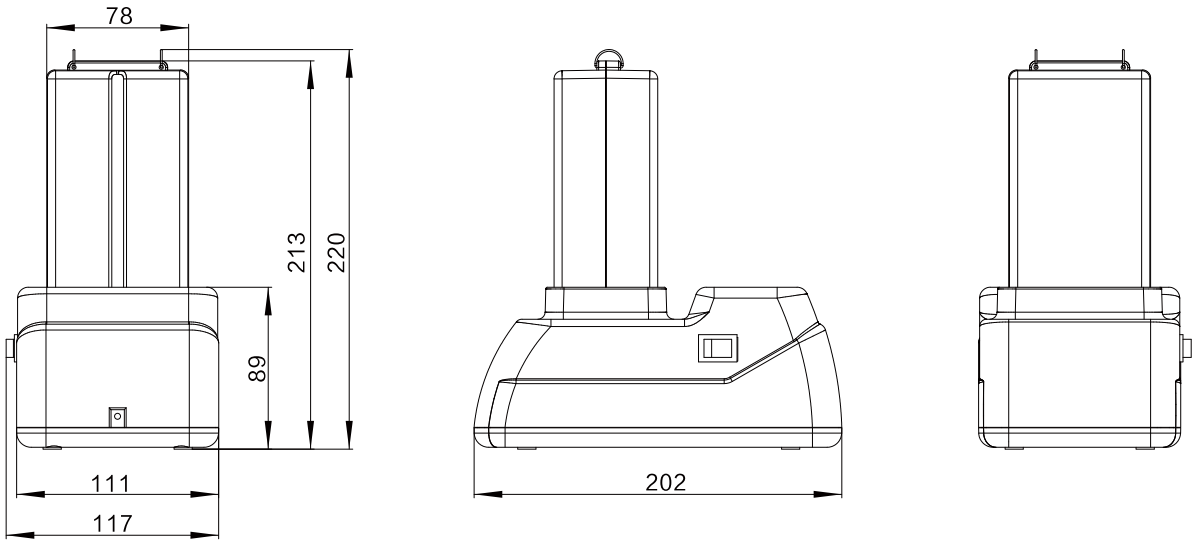

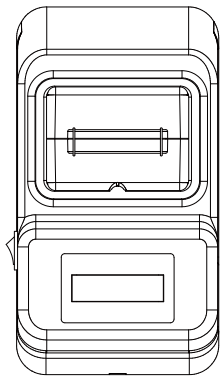

Ordering Key

Take **JCB35K2M35GK00084D4A** as an example

Model	**JCB35K2**	
Extension features	**X**	0 = standard / AM = With Battery function and microchip M = With microchip
Actuator channel	**X**	2 = 2 Channels
Input voltage	**X**	4=20-30VDC (including 30) / 5=30-42VDC (including 42)
Colour	**X**	G = Gray
PCB code	**XX**	K0008 = specific code
Battery capacity	**XX**	2D2 = 2.2Ah / 4D4 = 4.4Ah
Optional features	**XX**	A = With screen display / B = Without screen display

Diagram-system overview

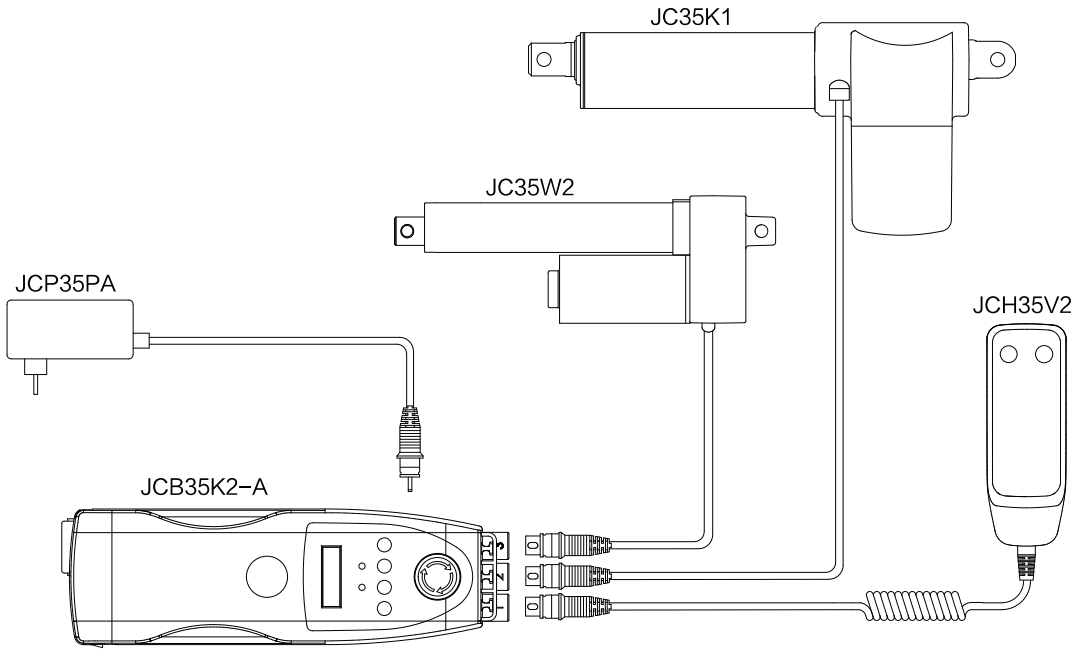

Installation

Battery installment steps

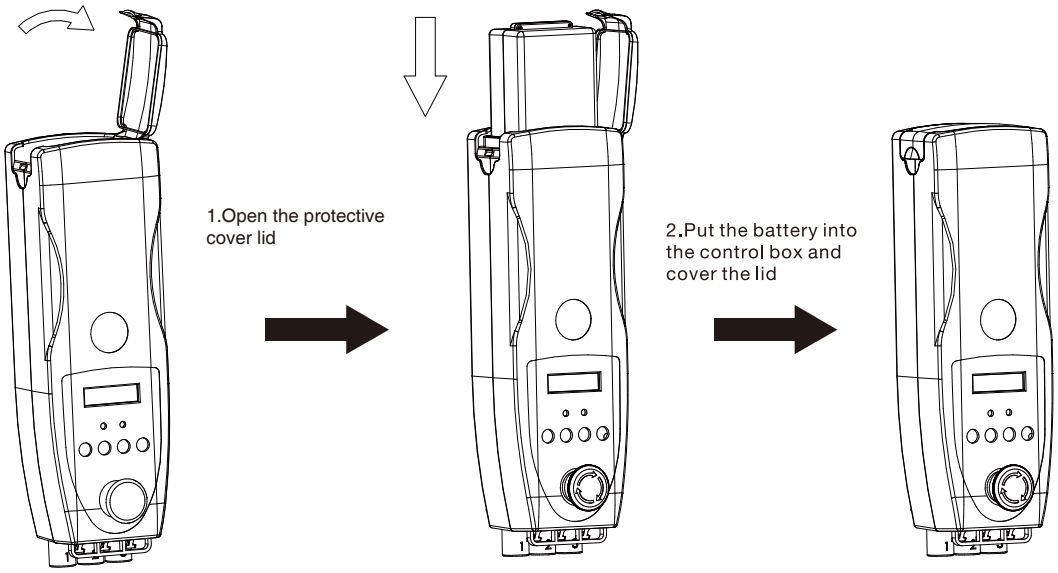

Battery removal steps

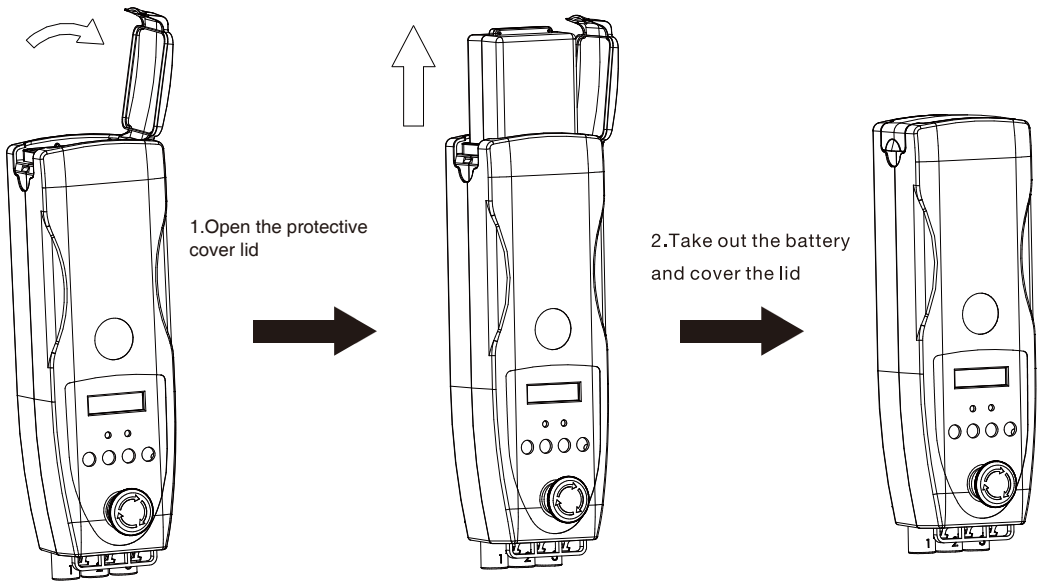

Installing JCB35K2-A to the frame

The control box can be installed on the patient lift or any other application according to the following steps.
1)Fix the mounting plate on the patient lift frame with M5*12 screws;
2)Insert the control box onto the mounting plate.



Note:	It is recommended to install the control box vertically for easy viewing of the screen display.

The charger is on the table



Charging status

The display shows the charging status

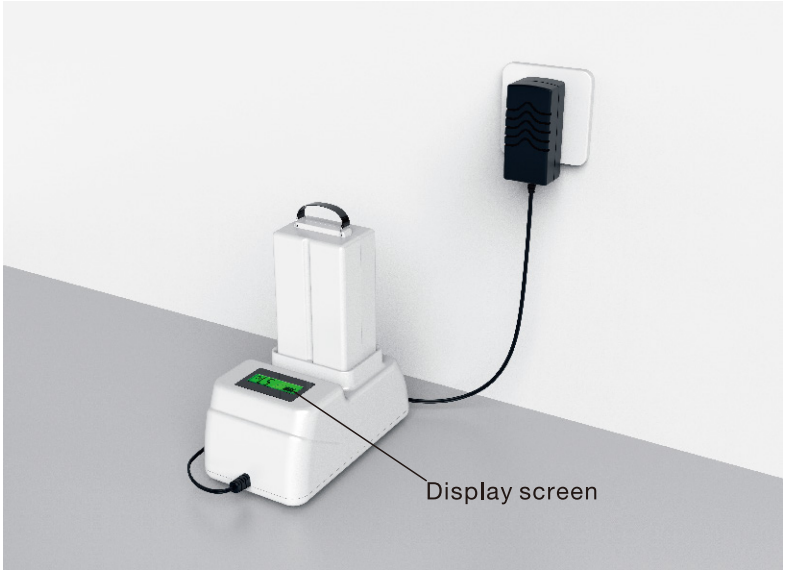

Note:	The charger is not waterproof and washable, please use it in dry conditions.

Pull-out protection and Cable Management

The control box JCB35K2-A uses Din connector, the cable can be inserted vertically upward.

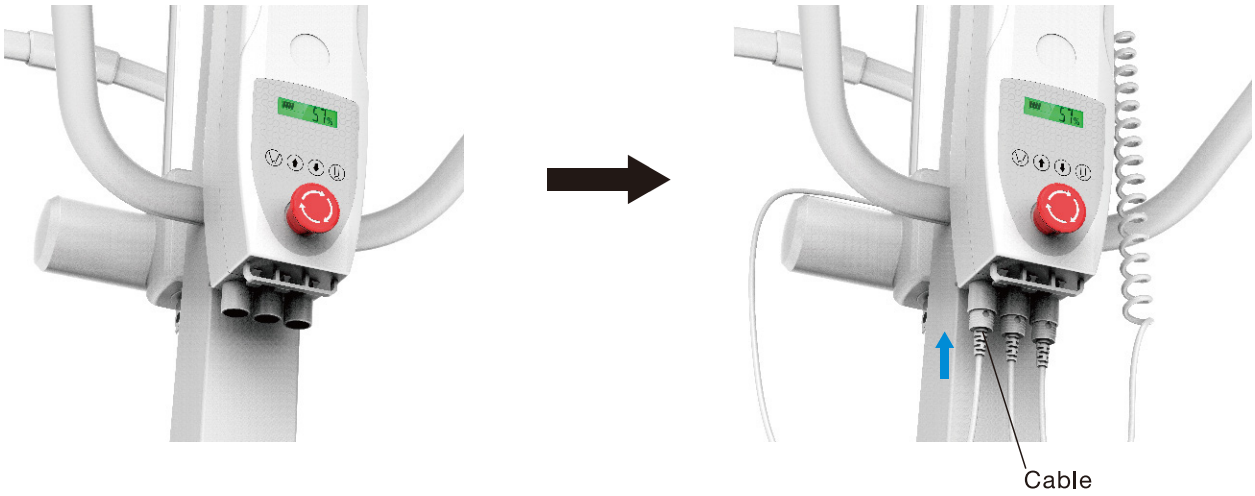

Emergency Stop

1)After pressing the emergency stop button under any situation, the power of the system will be cut off and the actions will be stopped.
2)According to the arrow on the button, turn clockwise the emergency stop button, the control box will be powered on and it can be operated normally.



Strictly abiding by medical safety certifications

Passed EMC tests. To ensure our products pass all kinds of tests domestic or abroad.

Communication protocol development

Aiming at different applications, develop more extensive functions for control system.

Professional customization

Powerful R&D strength, fully satisfy customers' needs. Development cycle is about 10 days, seizing more market opportunities

Intelligent Control of Bluetooth

Mobile phone as the remote, applying in home care. Market pioneer, Jiecang provides better choices

Wireless Communication

Controllers adopt high-frequency wireless system. It can avoid interference mixing with signal receivers, assisting in remote control over medical equipment.

Latest Weighing System

Designed for physiotherapy beds and medical care beds. Cantilever carrying weighing sensor, it is applicable to different bedsteads dispensing with any adjustment

Disclaimer and Exclusion of Liability

The user must determine the suitability of JIECANG products under specific conditions. JIECANG is committed to providing the latest product information. However, as JIECANG' s product are constantly improving, it is possible to make changes to JIECANG' s product without prior notice. Therefore, JIECANG cannot guarantee the correctness and authenticity of the product information. Although JIECANG will do its best to meet the order requirements, due to the above reasons, JIECANG cannot guarantee the delivery capacity of any specific product.

Therefore, JIECANG reserves the right to stop selling any products listed on the website or product catalog or other JIECANG written materials. All sales activities must be carried out in accordance with the requirements of JIECANG sales and Delivery Standard Clauses. For copies of relevant documents, please contact JIECANG.

Notes for mounting and usage can be found in the corresponding mounting manual

TECHNOLOGY
DRIVES INTELLIGENT LIFE